4B570 HV Quatro

4B570: 4 Ball Pump Size 570cc

part number:

REX	4B	0570	-	MO	-	MA	-	FO	-	SE

example: REX4B0570-72-CS-G1-06

The unique technology of this pump allows high viscosity products to be circulated under high pressure without the use of an intermediate tank. It can act as a booster for the distribution lines of sealing compounds because it increases the inlet pressure by a ratio that depends on the selected motor. The stainless steel version is specially designed for water-based sounddeadner.

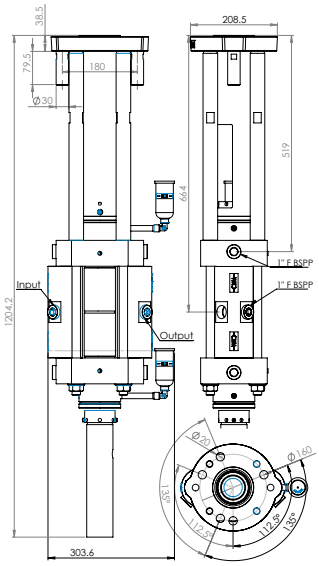

Technical Data

Fluid volume per cycle	570	cc	19,27	oz
Stroke	200	mm	7,87	inch
Maximum service pressure	240 bar for SST version 300 bar for other versions	bar	4400	psi
Weight	83	kg	183	Lbs
Fluid outlet	1 ''	F BSPP		

Maximum ouput pressure is 240 bars for stainless steel version and 300 bars for other versions. It is your responsibility to monitor the inlet pressure so that the output pressure does not exceed the maximum allowed.

Air Motor

MO

	Available Motors	Pressure Ratio	Maximum Air Inlet Pressure		Maximum Outlet Fluid Pressure		Minimum Outlet Fluid Pressure		Motopump Weight		Air consumption 15 Stroke/min @ 4 bar		Air inlet fitting
		su	bar	psi	bar	psi	bar	psi	Kg	Lbs	NL.min-1	scfm	Female BSP
XX	NONE	-	-	-	-	-	-	-	-	-	-	-	-
72	MOTOR 7200	33 : 1	6	100	200	2900	50	718	111	244,8	1129	39,9	3 / 4 "
92	MOTOR 9200	53 : 1	6	100	300	4600	80	1153	120	264,6	1813	64,0	3 / 4 "

scfm= Standard cubic feet of gas per minute

Pump Construction

MA

	Available Materials	Pump body			Piston			
		Wet Cup	Upper body	Cylinder	rod	Nut	Valve Ball	Valve Seat
CS	Mixed materials	CS+Zn	CS+Zn	CS+Cr	SST+Cr	CS+Zn	CS	CS
SS	Stainless steel	SST	SST	SST+Cr	SST+Cr	SST	SST	SST

CS: Carbon Steel - SST: Stainless Steel - CB: Carbide - Zn: Zinc treatment - Cr: Chromium treatment

Foot and Mounting Styles

FO

	Available Configurations	Technical characteristic	Materials (MA)	
			1: Mixed materials	2: Stainless steel
G1	1'' F BSPP	-	Available	Available

Seal Pack Options

SE

	Available Seals Packing	Static seals "O"-rings	Upper seals packing	Piston seals packing
06	PU	FKM	PU/PE	PE/PTFEV
07	PEEK	FKM	PEEK/PTFEG	PEEK/PTFEG

PTFE = Polytetrafluoroethylene
PTFEG = PTFE + Graphite
PE = Polyethylen
FKM = Fluoroelastomer
PU = Polyurethan
PTFEV = PTFE + Glass
FEP = Covered O-rings